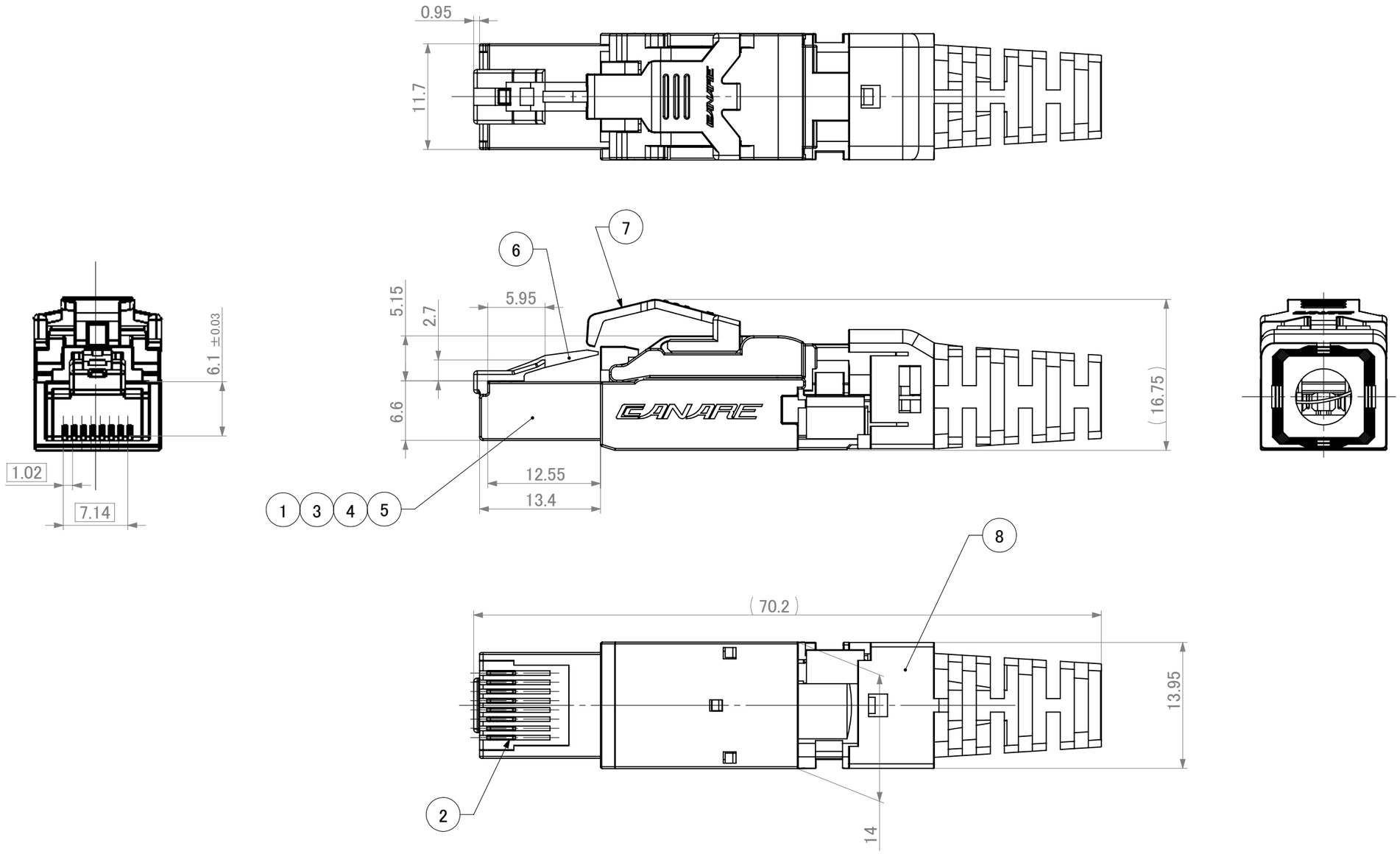

No	NAME	Pc(s)	MATERIAL	FINISH
8	Boot	1	PC	Black
7	Latch Button	1	PC	Black
6	Plug latch	1	PC	Black
5	Organizer	1	ABS	Black
4	IDC contact	8	Phospher Bronze	Ni/Sn Plating
3	PCB	1	FR4	-
2	Contact	8	Phospher Bronze	Gold Plating
1	Body	1	Zinc Alloy Die-Cast	Nickel Plating

PROJECTION	THIRD ANGLE	UNIT	mm	SCALE	2:1	TOLERANCE	2DIM ±0.2 / ANGLE ±2.0°	Ver.	1.0	DATE	2023-12-27

DRAWING NAME	TYPE NAME	DRAWING No.	PAGE
Field termination modular plug Cat6A U/FTP	RJSP-6AFT	BL616	1 / 1

BOM No.